RevNo	Revision note	Date	Signature	Checked

TAD-20/30 Tropical Air Dryer System

1) Inlet Filter/Separator = 5 micron Filter
2) After Cooler/PreCooler = Shell-and-Finned Tube Type
   (Hot Compressed Air-to-Cold Compressed Air)
3) Chiller = Shell-and-Finned Tube Type
4) Refrigerated Air Dryer = 20HP/30HP Respectively
5) Outlet Filter/Separator = 1 micron Filter
6) Drain Valves = Float AutoDrain Valve 1 set
   Solenoid Valve 1 set

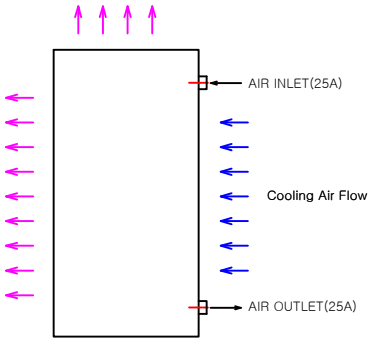

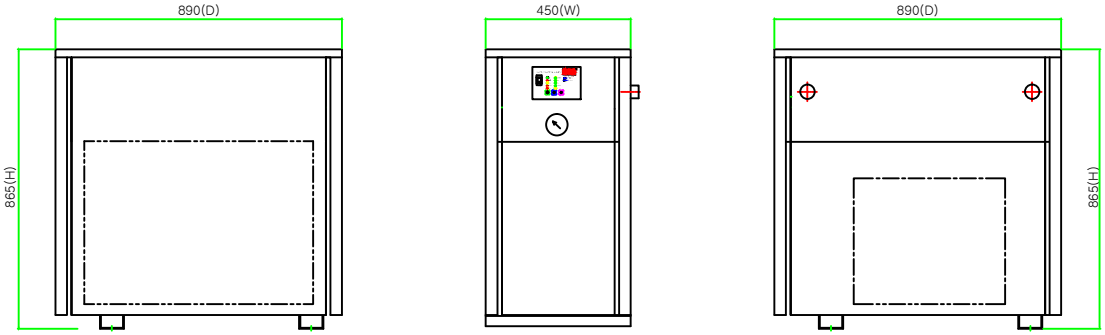

Outline Dimension	High Inlet Temp. Air Dryer 20HP		
	TAD-20	Edition	Sheet